amecthermasol

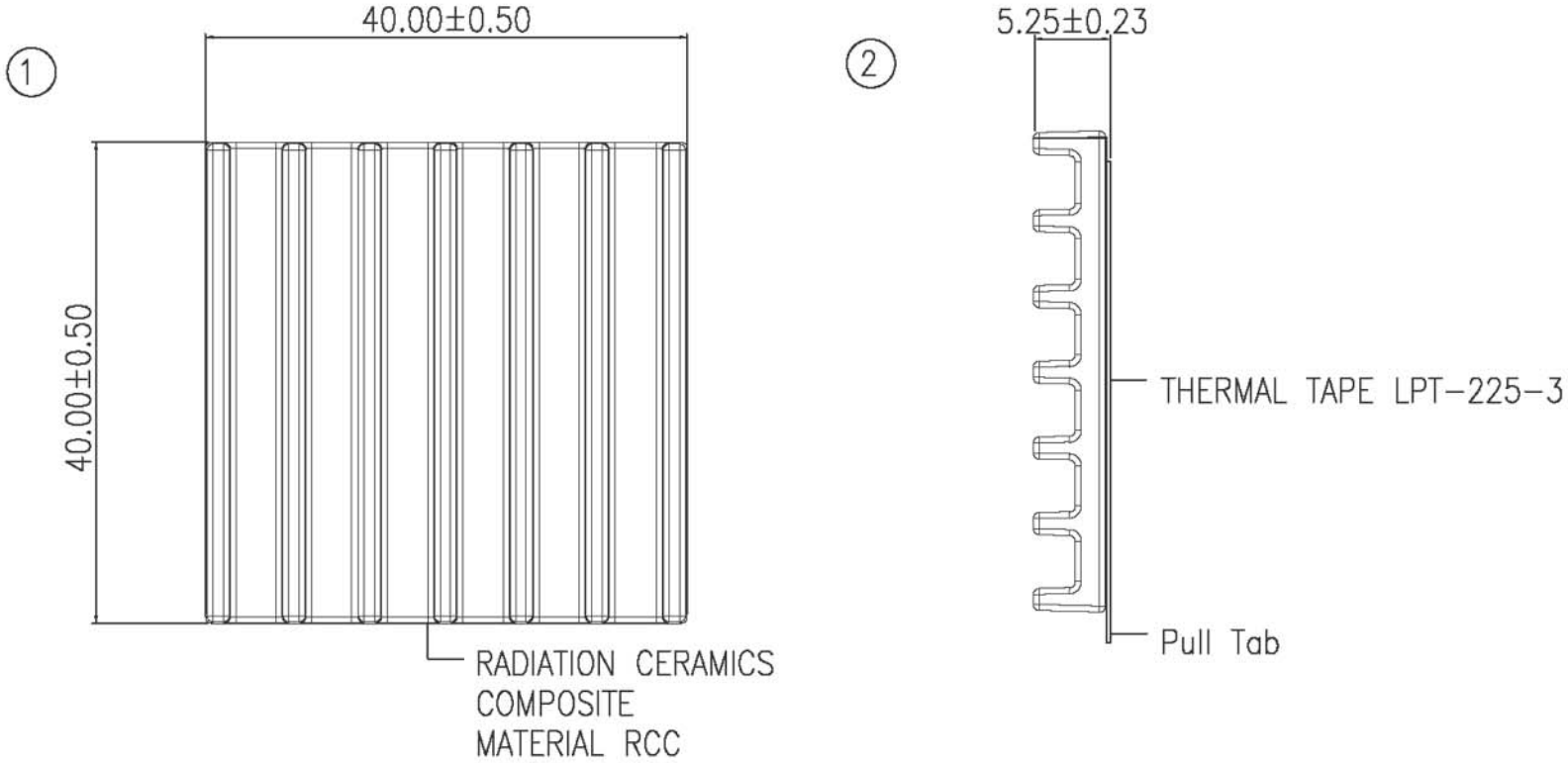

NOTE:1. ○ PROCESS DIM.(IQC INSPECTION DIM.)

2.COLOR:RCC IS GRAY;THERMAL TAPE LPT-225-3 IS WHITE.

3.RCC+THERMAL TAPE LPT-225-3 (TOTAL THICKNESS 5.25 REF)

4.ROHS REQUIREMENT.

SHEET 1 OF 1

Reason			UNSPECIFIED TOL'S. (±0.15mm)									FINISH. SEE NOTE						
			ANGLE ± 1°	DIM. / GRADE	0	1	2	3	4	5								
				0 — 16								PART NO.	SCALE / F	UNIT MM ~~CINJ~~	DWG. TITLE. FCH40405T			
			ROUGHNESS	16 — 63									APPROVE					
				63 — 250									CHECK					
				250 — 500								MATERIAL. SEE NOTE	DESIGN	VICKY	NOV.7.2011	DWG. NO.	REV. R01	SIZE A3
	ZONE	DESCRIPTION		500 — 1000														